FEATURE HIGHLIGHTS

- LASER LIGHT SOURCE 5000 ANSI LUMENS
- SHORT THROW
- BIG ZOOM & LENS SHIFT
- 360-DEGREE PROJECTION
- HDBASET
- DIGITAL SHRINK AND SHIFT
- IMAGE MEMORY
- PROJECTOR AND REMOTE CONTROL ID SETTING

Product Specifications

Projection System	DLP Single 0.47"WUXGA	
DMD type	DC3 DMD Chip	
Native Resolution	1920 x 1200 pixels	
Brightness	5,000 ANSI Lumens	
Contrast Ratio *	100,000 : 1	
Display Color	1.07 Billion Colors	
Aspect Ratio	Native 16 : 10 (5 aspect ratio selectable)	
Projection Size	30"~300"	
Throw Ratio	0.81~0.88	
Zoom Ratio	1.1x	
Lens Control	Manual Zoom and Focus	
Lens Shift	Manual lens shfit, V: ±60 %; H: ±23 %	
Light Source Type	Laser Diode	
Light Source Life **	20,000 Hours	
Keystone Adjustment	2D keystone, V: ±30 degree; H: ±30 degree	
Resolution Support	VGA (640 x 480) to WUXGA_RB (1920 x 1200) *RB-Reduced Blanking"	
Horizontal Frequency	15~102KHz	
Vertical Scan Rate	24~120 Hz	
Compatibility	HDTV Compatibility	480i, 480p, 576i, 567p, 720p, 1080i, 1080p
	Video Compatibility	NTSC, PAL, SECAM
Dimensions (W x H x D)	490 x 156 x 380 mm	
Weight	9.4 kg	
Power Supply	100~240V AC	
Power Consumption (Max / Normal / Eco)	530W / 475W / 365W	
Standby Power Consumption	Normal < 0.5W, Network <2W	
Audible Noise	37 / 35 dBA	
Operating Temperature	0 ~ 40°C	
Built-in Speaker	10W	
Security (anti-theft)	Security Bar	
Feature	Digital Shrink and Shift, Image Memory, Projector / Remote Control ID Setting, Auto High Altitude Mode, HDBaseT, LAN Control, 360° Projection, Dust-proof Filter	
On-Screen Display Languages	Arabic / Bulgarian / Croatian / Czech / Danish / Dutch / English / Finnish / French / German / Greek / Hindi / Hungarian / Italian / Indonesian / Japanese / Korean / Norwegian / Persian / Polish / Portuguese / Romanian / Russian / Simplified Chinese / Spanish / Swedish / Turkish / Thai / Traditional Chinese / Vietnam (30 languages)	
Accessories	**Standard**	**Optional**
	Power Cord	Ceiling mount (CMG3)
	Remote Control (RCA011)	3D glasses
	Lens Cover	
	AAA Battery x 2	
	Installation Guide / Regulatory Statement (Combined)	
	Warranty Card (by sku)	
	Anti-dust Filter	

* The Contrast is measure by Full On Full Off standard.
**LightSource life results will vary depending on environmental conditions and usage. Actual product's features and specifications are subject to change without notice.

LU951ST

BenQ DLP Projector

Input and Output Terminals

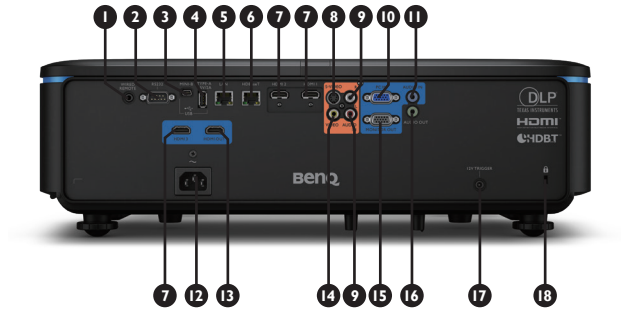

1. Wired Remote Input
2. RS232 Input (D-sub 9pin, male)
3. USB Type B (Service)
4. USB Type A (5V / 2A power)
5. LAN Port (RJ45 for Network control)
6. HDBaseT
7. HDMI Input
8. S-Video Input
9. RCA Audio Input L / R
10. PC Input
11. Audio Input (mini jack)
12. AC Power Jack
13. HDMI Output
14. Composite Video (RCA)
15. Monitor Output (D-sub 15pin, Female)
16. Audio Output (mini jack)
17. Audio out (mini jack)
18. IR Receiver

Dimensions

Distance Chart

Screen size				Distance from screen (mm)			Offset (mm)
Diagonal		W (mm)	H (mm)	Min length (max zoom)	Average	Max length (min zoom)	
Inch	mm						
40	1016	862	538	698	732	767	0
50	1270	1077	673	872	915	958	0
60	1524	1292	808	1047	1098	1150	0
80	2032	1723	1077	1396	1465	1534	0
90	2286	1939	1212	1570	1648	1725	0
100	2540	2154	1346	1745	1831	1917	0
110	2794	2369	1481	1919	2014	2109	0
120	3048	2585	1615	2094	2197	2300	0
130	3302	2800	1750	2268	2380	2492	0
140	3556	3015	1885	2443	2563	2684	0
150	3810	3231	2019	2617	2746	2875	0
160	4064	3446	2154	2791	2929	3067	0
170	4318	3662	2289	2966	3112	3259	0
180	4572	3877	2423	3140	3295	3451	0
190	4826	4092	2558	3315	3479	3642	0
200	5080	4308	2692	3489	3662	3834	0
250	6350	5385	3365	4362	4577	4792	0
300	7620	6462	4039	5234	5492	5751	0
350	8890	7539	4712	6106	6408	6709	0
400	10160	8616	5385	6979	7323	7668	0
500	12700	10770	6731	8723	9154	9585	0

*To optimize your projection quality, we suggest to do the projection within non-gray area.

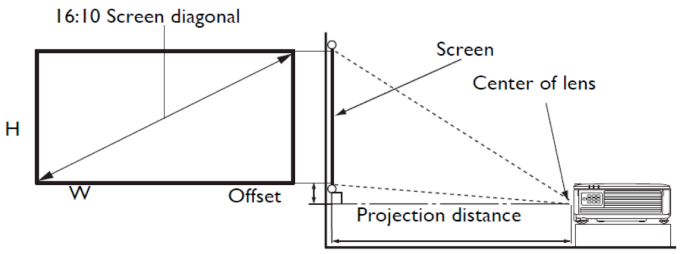

Ceiling Mount Chart

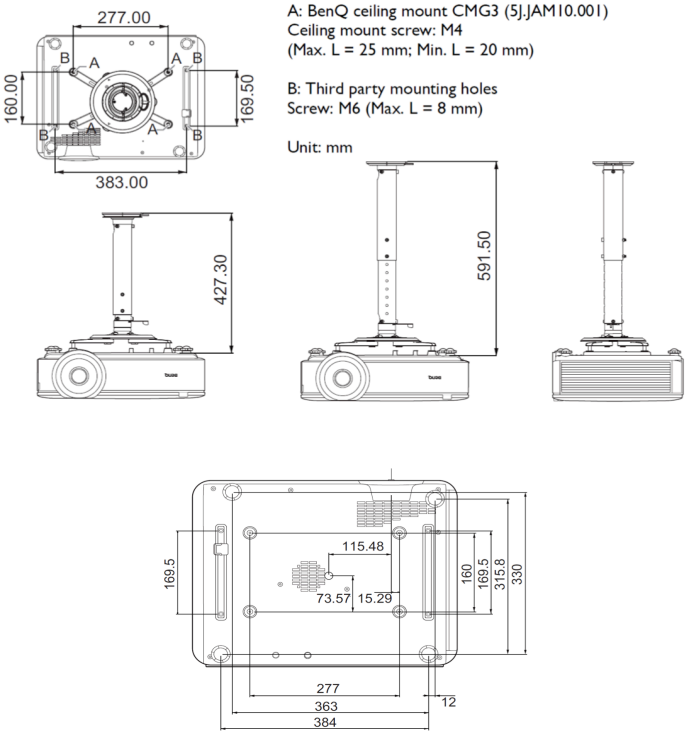

BenQ Europe B.V.
Meerenakkerweg 1-17
5652 AR Eindhoven
The Netherlands
Tel: +31 88 8889200
BenQ.eu

© 2018 BenQ Corp. Specifications may vary by region, please visit your local stores for details. Actual product's features and specifications are subject to change without notice.
This material may include corporate names and trademarks of third parties which are the properties of the third parties respectively.